Series 1580/1585 User Manual
Document ID: SFE272
V2.0 2021-07-22

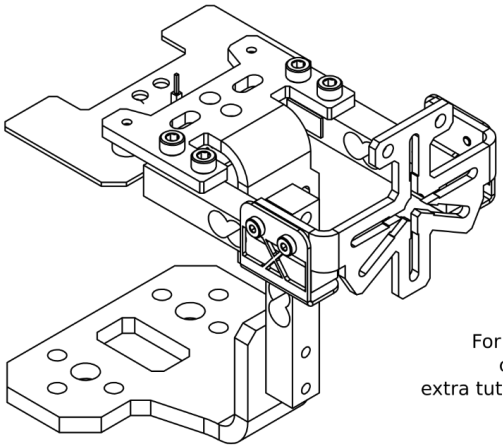

For the latest version of the manual and extra tutorials, please visit tytorobotics.com

Safety instructions

1) Do not work alone.
2) Always wear safety goggles.
3) When testing, use a safety enclosure around the test device.
4) Never stand in the plane of rotation of the propeller.
5) High currents can cause fires and burns. Use wire rated for the current used.
6) Do not reverse polarity. Damage will occur.
7) Do not short the circuit or the power source.
8) Do not use voltages over 35 V.
9) Always disconnect the power source before manipulating the equipment.

① Install 5 kg load cell

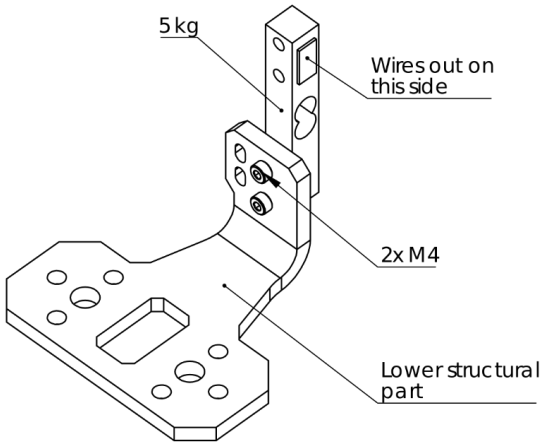

Note: for added safety, you may use removable (blue) thread-locking fluid to secure the screws. Do not use permanent (red) fluid.

② Install 2 kg load cells and upper structural part

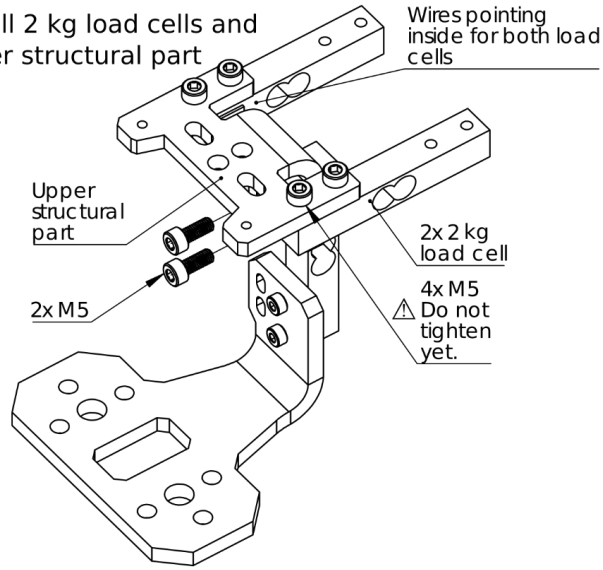

B1 - 80 rue Adrien Robert • Gatineau, QC, Canada J8Y 3S2

sales@tytorobotics.com
tytorobotics.com • 1-844-722-8378

③ Attach the L-brackets to the motor mount

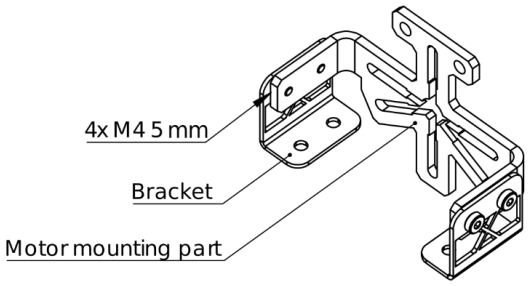

④ Assemble data acquisition board, motor mounting part, and lower structural part

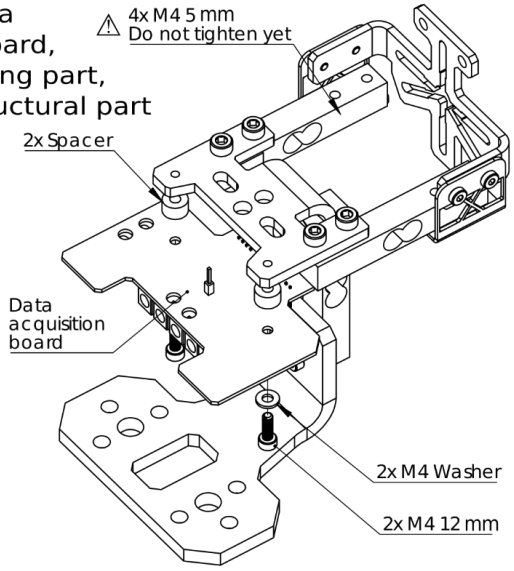

⑤ Position 2 kg load cells parallel to each other and tighten

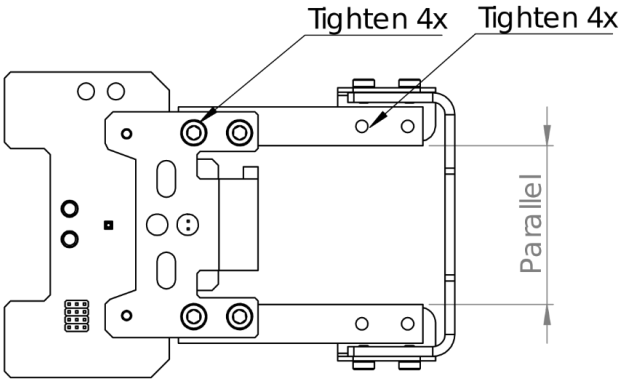

Top View

⑥ Connect in the following order: the load cells, the power cables, and the USB cable

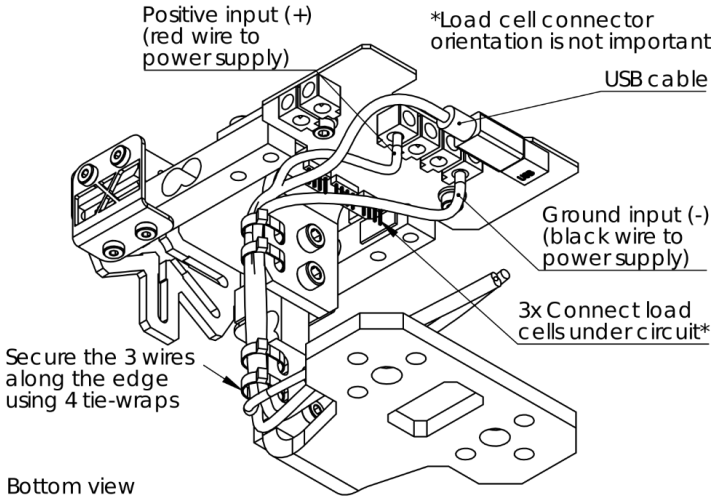

Bottom view

B1 - 80 rue Adrien Robert • Gatineau, QC, Canada J8Y 3S2

sales@tytorobotics.com
tytorobotics.com • 1-844-722-8378

⑦ Software installation

1) Go to https://www.tytorobotics.com/blogs/manuals-and-datasheet/rcbenchmark-software-overview to install the app.
2) Launch the application from your computer.
3) Connect the device to a computer using the USB cable.
4) Press the "Connect" button in the app as seen below.

⑧ Calibration

Follow the instructions provided in the app to calibrate your device. Recalibrate the device if it has been disassembled, if the wires have been moved, or every 2 months.

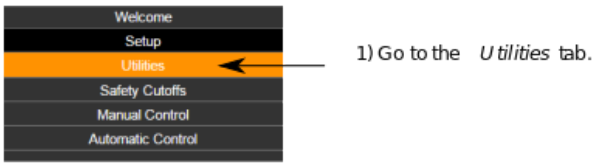

⑨ Power system schematic

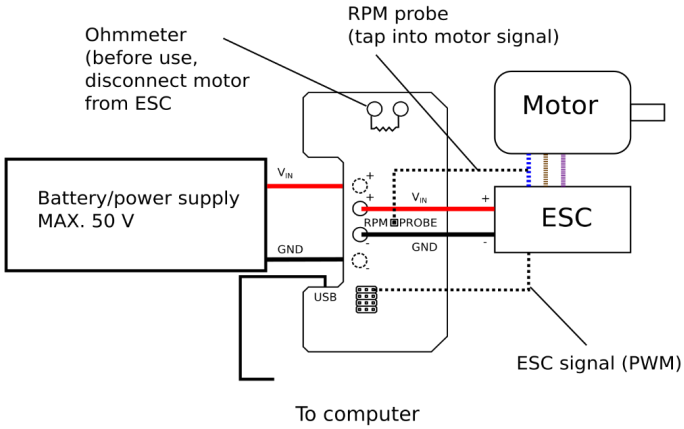

The servo power rail of the Series 1580 in not connected. It is USB powered (max 100 mA) by a jumper on the Series 1585.

⑩ Secure all wires, the ESC, and the device

Dangling wires may cause errors in the thrust and torque measurements. Secure all wires and the ESC using tie-wraps or double-sided tape. Wires from the motor to the ESC may be secured along the load cells. If the motor has stiff wires, it is recommended to perform a torque calibration for high precision measurements.

Secure the device to a table using c-clamps or bolts.

⑪ (Next page) Inrunner motor, ESC, and speed probe installation example.

B1 - 80 rue Adrien Robert • Gatineau, QC, Canada J8Y 3S2

sales@tytorobotics.com
tytorobotics.com • 1-844-722-8378

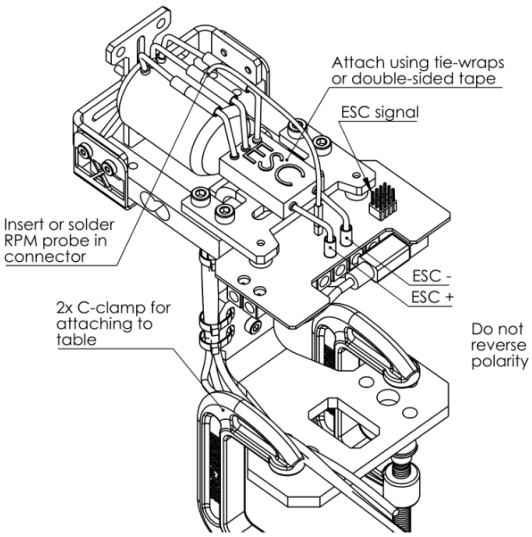

12 Speed measurement

In the "Setup" tab of the app, indicate the number of poles for the motor you are using. Press the ? icon for help on pole counting.

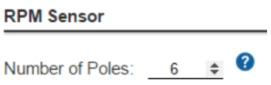

13 Support and warranty

For feedback of questions regarding the installation of the device, please contact us at support@tytorobotics.com.

RCbenchmark products are fully tested and inspected before shipping. This product is covered by a one year warranty on manufacturing defects.

The warranty does not cover misuse, product modifications, and reverse polarity connections. When testing at high voltage, do not use an ESC with a break setting activated. The breaking over-voltage could damage the power measurement circuit.

14 Motor and propeller testing

The mechanical load on the motor is controlled by changing the throttle and by installing a propeller of different size or pitch. You may also perform your tests at multiple voltages.

You can manually control the motor for your tests and record your data manually or continuously. These options are available in the "*Manual Control*" tab.

You can also use the supplied scripts in the "*Automatic Control*" tab to test and record motor data automatically.

If you have special testing requirements, you can use our very powerful scripting functionnality. You have access to the full power of Javascript, can control the dynamometer, export data, and much more through our API. Example applications include motor certification for production or repeatable tests for characterization and research.

Included

- -Assembly manual (1)
- -Data acquisition board (1)
- -Calibration bar (1)
- -Calibration weight (200 g)
- -Black knobs (2)
- -Motor mounting part (1)
- -Lower structural part (1)
- -Upper structural part (1)
- -Power cables (2 x 75 cm)
- -Load cell 2 kg (2)
- -Load cell 5 kg (1)
- -L-Brackets (2)
- -Tie-wraps (≈10)
- -Hex keys (3)
- -Washers to install motors (1 bag)
- -USB cable (1)

-RPM probes (1 + 1 extra)

-Spacers (2)

-Washers M4 (2)

-M4 5 mm (12)

-M4 12 mm (4)

-M5 12 mm (6)

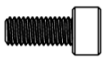

B1 - 80 rue Adrien Robert • Gatineau, QC, Canada J8Y 3S2

sales@tytorobotics.com
tytorobotics.com • 1-844-722-8378